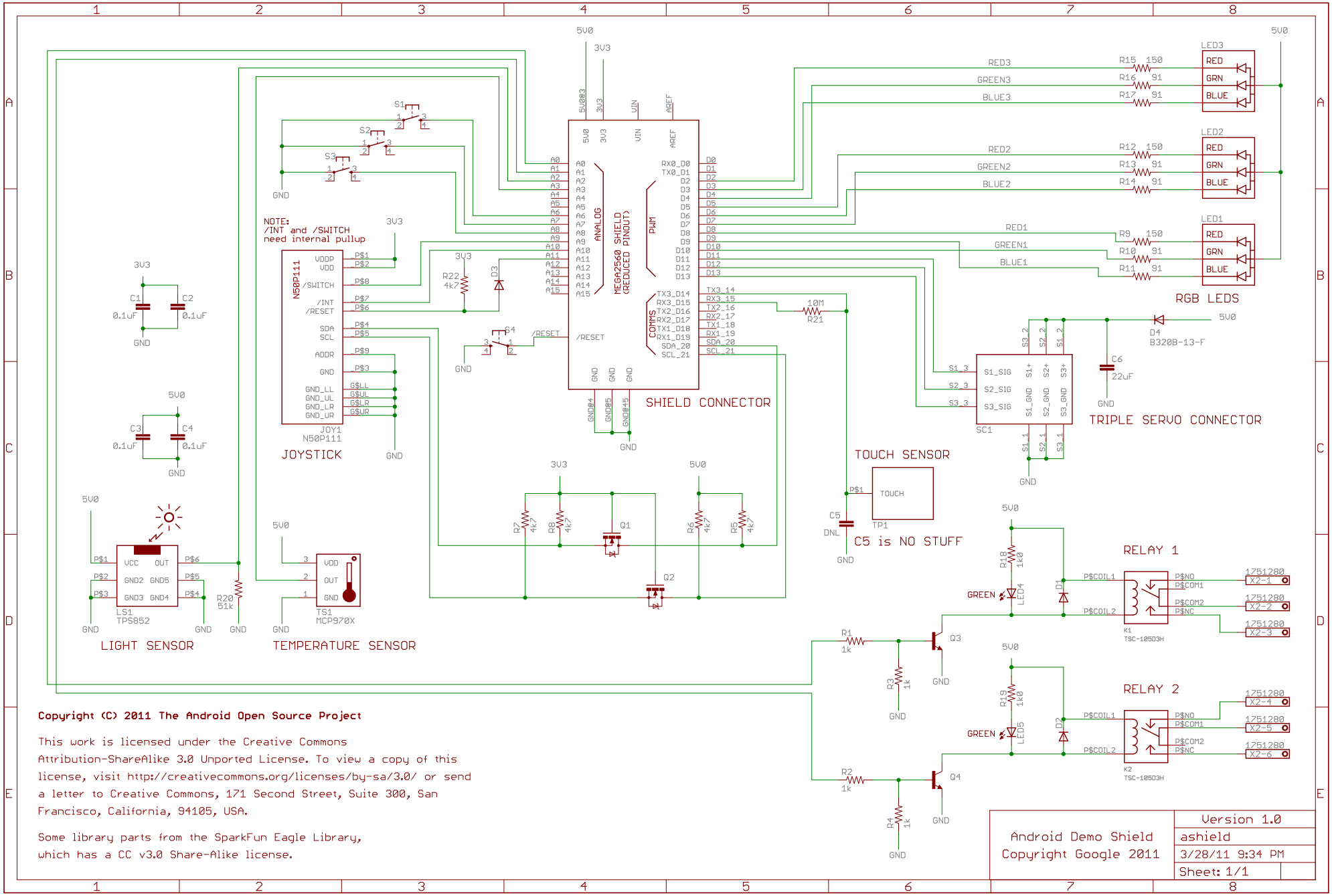

Copyright (C) 2011 The Android Open Source Project

This work is licensed under the Creative Commons Attribution-ShareAlike 3.0 Unported License. To view a copy of this license, visit http://creativecommons.org/licenses/by-sa/3.0/ or send a letter to Creative Commons, 171 Second Street, Suite 300, San Francisco, California, 94105, USA.

Some library parts from the SparkFun Eagle Library, which has a CC v3.0 Share-Alike license.

Android Demo Shield Copyright Google 2011	Version 1.0
	ashield
	3/28/11 9:34 PM
	Sheet: 1/1